DATALOGIC

S15

Plastic and stainless steel tubular M18 photoelectric sensors every environment

- Short case models for cost and space savings
- Plastic and stainless steel case with IP69K protection
- All optic functions at optimal operating distances
- Models with fixed settings or adjustment trimmer
- Cable, M12 connector and pig-tail models

SENSORS

APPLICATIONS

-Processing and Packaging machinery
-Assembling and Conveyor lines

IP69K

(*) Stainless steel models.
ATEX II 3DG

S15		
Through beam		0...20 m
Retroreflective (on R2 reflector)		0,1...5 m
Polarized retroreflective		0,1...4 m
Retroreflective for transparent (on R2 reflector)		0,1...0,8 m
Diffuse proximity		short distance 0...100 mm medium distance 0...350 mm long distance 1 m
Fixed focus		0...50 mm
Background suppression		40...120 mm
Power supply	Vdc	10...30 V
	Vac	
	Vac/dc	
Output	PNP	▪
	NPN	▪
	NPN/PNP	
	relay	
	other	
Connection	cable	▪
	connector	▪
	pig-tail	▪
Approximate dimensions (mm)		M18x44/48
Housing material		ABS, INOX AISI 316L
Mechanical protection		IP65 - IP67 - IP69K

TECHNICAL DATA	
Power supply	12 ... 30 Vdc (limit values)
Ripple	2 Vpp max.
Consumption	25 mA max.
Light emission	red LED 660 nm (mod. S15...B/D/T/M) IR LED 880 nm (mod. S15...A/C/G)
Setting	mono-turn trimmer (mod. S15...A01/B01/Cx1/T01/F01) and 4 turns (mod. S15...M01)
Operating mode	white wire or pin 2 not connected: LIGHT mode (mod. S15...C/D/M)/DARK mode (mod. S15...A/B/T/F) white wire or pin 2 connected to: 0 V DARK mode, +Vcc LIGHT mode
Indicators	yellow OUTPUT LED green STABILITY LED, POWER LED (mod. S15...G)
Output	PNP or NPN
Output current	100 mA max.
Saturation voltage	2 V max.
Response time	1 ms (mod. S15...A/B/C/T/M) 2 ms (mod. S15...F) 500 µs (mod. S15...D)
Switching frequency	500 Hz (mod. S15...A/B/C/T/M) 250 Hz (mod. S15...F) 1 kHz (mod. S15...D)
Connection	M12 4-pole connector, 2 m cable Ø 4 mm, 150 mm length Ø 4 mm cable with M12 4-pole connector (pig-tail vers.)
Dielectric strength	500 Vac 1 min., between electronics and housing
Insulation resistence	>20 MΩ 500 Vdc, between electronics and housing
Mechanical protection	IP65, IP67, IP69K
Ambient light rejection	according to EN 60947-5-2
Vibrations	0.5 mm amplitude, 10 ... 55 Hz frequency, for each axis (EN60068-2-6)
Housing material	ABS TERLURAN, INOX AISI 316L (mod. S15-PA) - (mod. S15-NA)
Lens material	plastic PMMA
Operating temperature	-25 ... 55°C
Storage temperature	-25 ... 70°C
Weight	40 g max. conn. vers., 55 g max. cable vers., 35 g max. pig-tail vers.

CONNECTIONS

CABLE AND PIG-TAIL

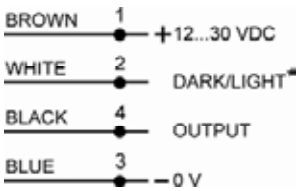

Through beam emitter

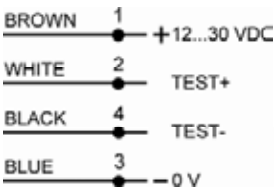

M12 CONNECTOR

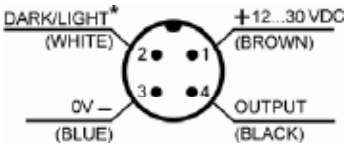

Through beam emitter

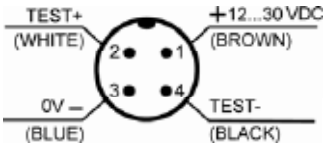

DIMENSIONS

PLASTIC

M12 connector version

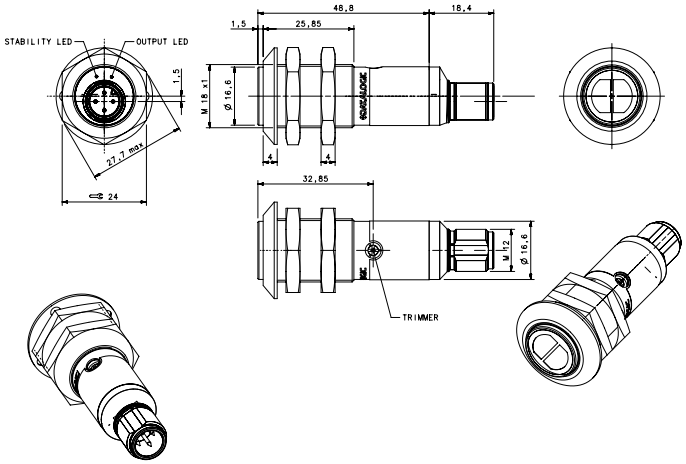

Cable version

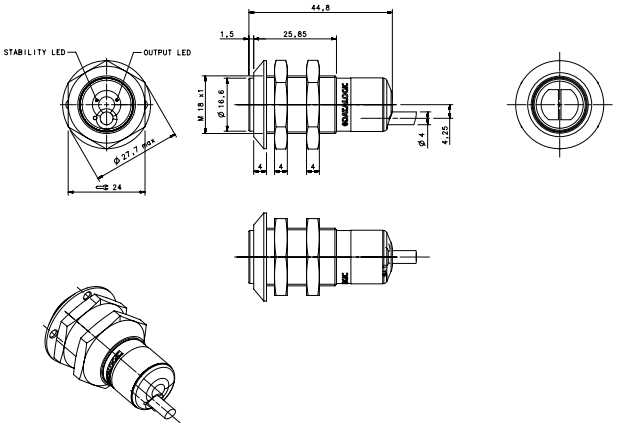

Through beam emitter - M12 connector version

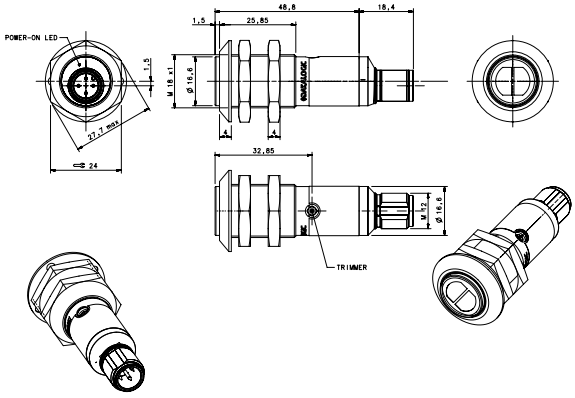

Background suppression - M12 connector version

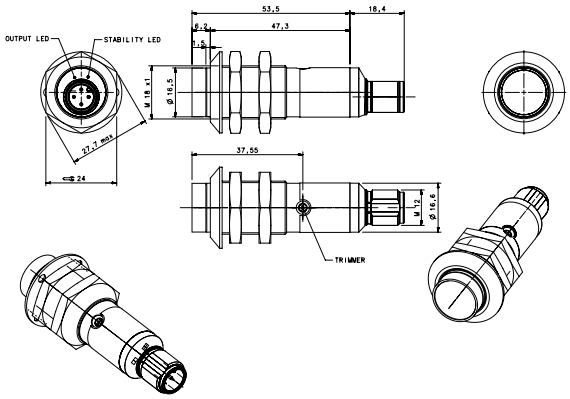

Through beam emitter - cable version

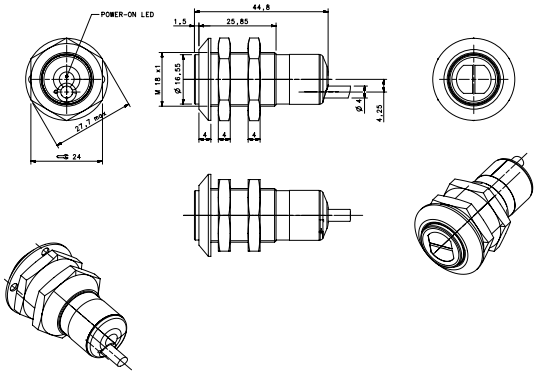

Diffuse proximity - cable version

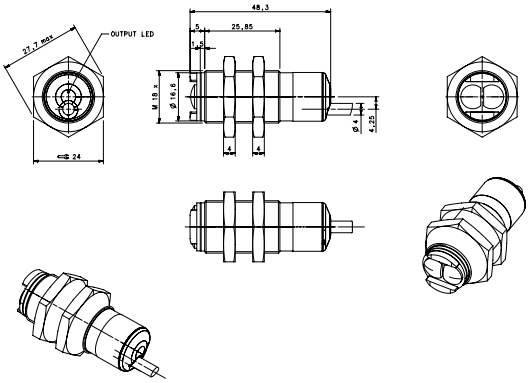

STAINLESS STEEL

M12 connector version

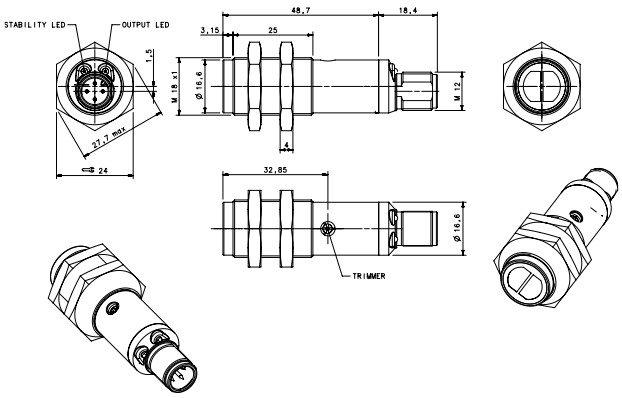

Through beam emitter - M12 connector version

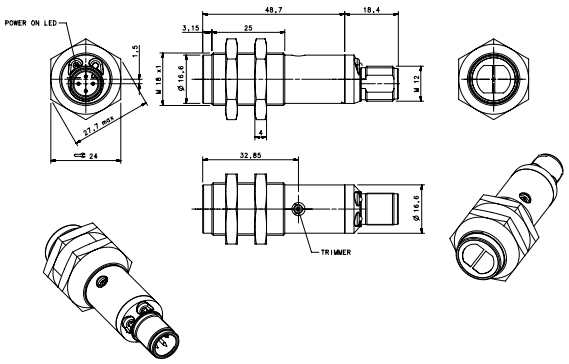

Background suppression - M12 connector version

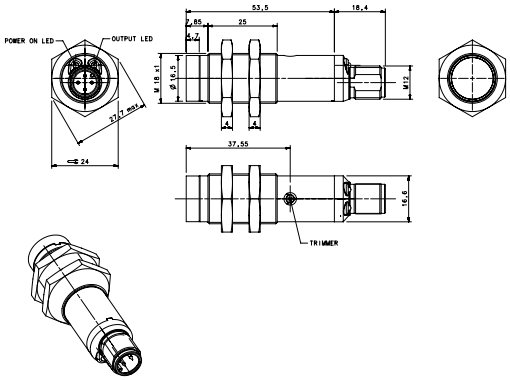

Pig-tail version

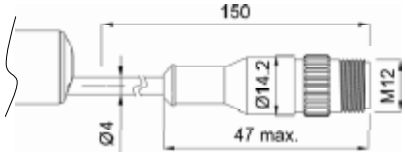

INDICATORS AND SETTINGS

Plastic/metal case with trimmer, M12 connector

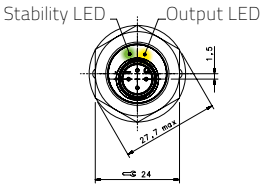

A01, B01, C11, C31, T01, F01, M01

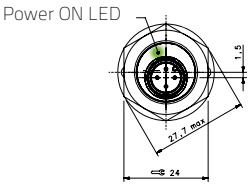

G01

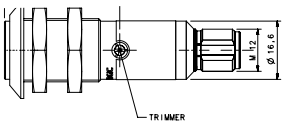

Plastic, no trimmer, Cable, Pig Tail

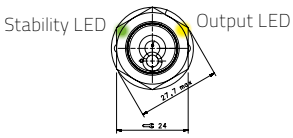

A00, B00, C10, C00, T01, D50

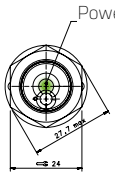

G00

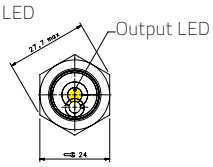

F00

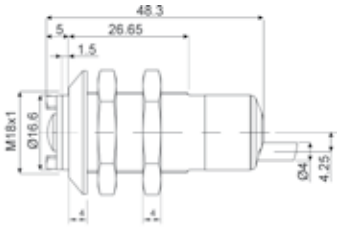

DETECTION DIAGRAMS

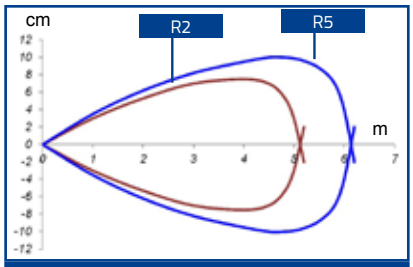

A00 - RETROREFLECTIVE

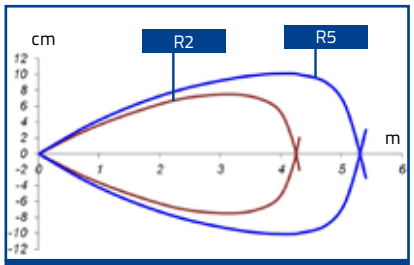

B00 - POLARIZED RETROREFLECTIVE

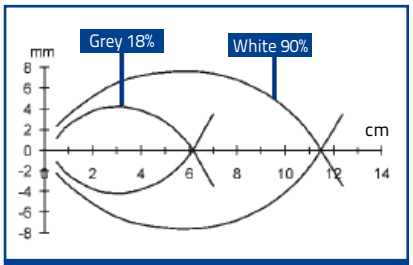

C00 - SHORT DIFFUSE PROXIMITY

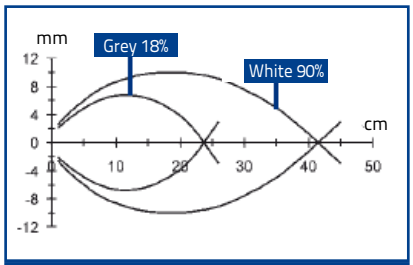

C10/C11 - MEDIUM DIFFUSE PROXIMITY

C31 - LONG DIFFUSE PROXIMITY

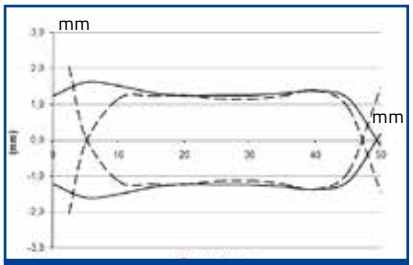

D50 - FIXED FOCUS PROXIMITY

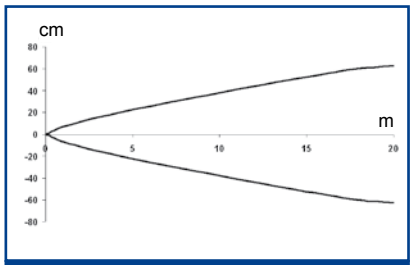

F00/G01 - THROUGH BEAM

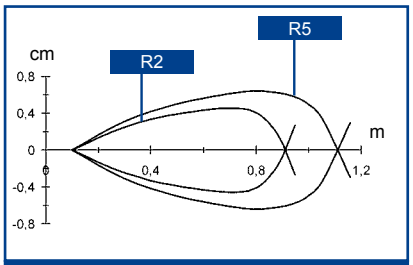

T01 - RETROREFLECTIVE BY TRASPARENT

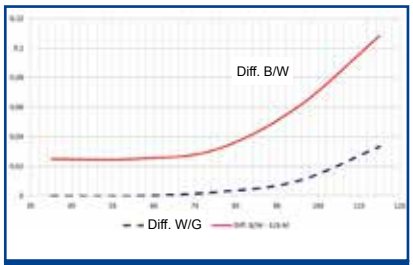

M01 - BACKGROUND SUPPRESSION
Difference White/Grey and Black/White

MODEL SELECTION AND ORDER INFORMATION

OPTIC FUNCTION	HOUSING	CONNECTION	OUTPUT	MODEL	ORDER No.
Retroreflective	Plastic	2 m cable	NPN	S15-PA-2-A00-NK	952301051
			PNP	S15-PA-2-A00-PK	952301001
		M12 connector	NPN	S15-PA-5-A01-NK	952301300
			PNP	S15-PA-5-A01-PK	952301220
		pig-tail	NPN	S15-PA-3-A00-NK	952301161
			PNP	S15-PA-3-A00-PK	952301111
	Stainless Steel	M12 connector	NPN	S15-NA-5-A01-NK	952301450
			PNP	S15-NA-5-A01-PK	952301370
Polarized Retroreflective	Plastic	2 m cable	NPN	S15-PA-2-B00-NK	952301061
			PNP	S15-PA-2-B00-PK	952301011
		M12 connector	NPN	S15-PA-5-B01-NK	952301310
			PNP	S15-PA-5-B01-PK	952301230
		pig-tail	NPN	S15-PA-3-B00-NK	952301171
			PNP	S15-PA-3-B00-PK	952301121
	Stainless Steel	M12 connector	NPN	S15-NA-5-B01-NK	952301460
			PNP	S15-NA-5-B01-PK	952301380
Diffuse proximity (short distance)	Plastic	2 m cable	NPN	S15-PA-2-C00-NK	952301071
			PNP	S15-PA-2-C00-PK	952301021
		pig-tail	NPN	S15-PA-3-C00-NK	952301181
			PNP	S15-PA-3-C00-PK	952301131
Diffuse proximity (medium distance)	Plastic	2 m cable	NPN	S15-PA-2-C10-NK	952301081
			PNP	S15-PA-2-C10-PK	952301031
		M12 connector	NPN	S15-PA-5-C11-NK	952301330
			PNP	S15-PA-5-C11-PK	952301250
		pig-tail	NPN	S15-PA-3-C10-NK	952301191
			PNP	S15-PA-3-C10-PK	952301141
	Stainless Steel	M12 connector	NPN	S15-NA-5-C11-NK	952301480
			PNP	S15-NA-5-C11-PK	952301400
Diffuse proximity (long distance)	Plastic	M12 connector	NPN	S15-PA-5-C31-NK	952301340
			PNP	S15-PA-5-C31-PK	952301260
	Stainless Steel		NPN	S15-NA-5-C31-NK	952301490
			PNP	S15-NA-5-C31-PK	952301410
Fixed focus	Plastic	2 m cable	NPN	S15-PA-2-D50-NK	952301530
			PNP	S15-PA-2-D50-PK	952301520
		pig-tail	NPN	S15-PA-3-D50-NK	952301550
			PNP	S15-PA-3-D50-PK	952301540
Through beam receiver	Plastic	2 m cable	NPN	S15-PA-2-F00-NK	952301091
			PNP	S15-PA-2-F00-PK	952301041
		M12 connector	NPN	S15-PA-5-F01-NK	952301360
			PNP	S15-PA-5-F01-PK	952301280
		pig-tail	NPN	S15-PA-3-F00-NK	952301201
			PNP	S15-PA-3-F00-PK	952301151
	Stainless Steel	M12 connector	NPN	S15-NA-5-F01-NK	952301510
			PNP	S15-NA-5-F01-PK	952301430
Through beam emitter	Plastic	2 m cable	-	S15-PA-2-G00-XG	952301101
		M12 connector	-	S15-PA-5-G01-XG	952301290
		pig-tail	-	S15-PA-3-G00-XG	952301211
	Stainless Steel	M12 connector	-	S15-NA-5-G01-XG	952301440
Background suppression	Plastic	M12 connector	NPN	S15-PA-5-M01-NK	952301350
			PNP	S15-PA-5-M01-PK	952301270
	Stainless Steel		NPN	S15-NA-5-M01-NK	952301500
			PNP	S15-NA-5-M01-PK	952301420
Transparent	Plastic	M12 connector	NPN	S15-PA-5-T01-NK	952301320
			PNP	S15-PA-5-T01-PK	952301240
	Stainless Steel		NPN	S15-NA-5-T01-NK	952301470
			PNP	S15-NA-5-T01-PK	952301390

ACCESSORIES

ST-5010

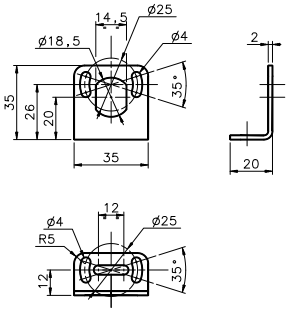

ST-5011

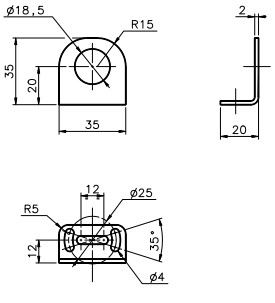

ST-5012

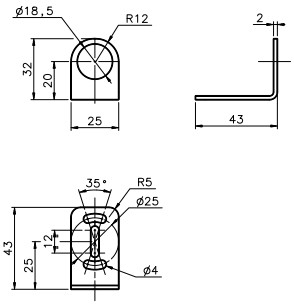

ST-5017

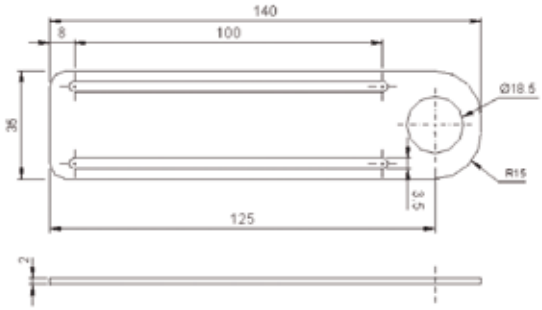

SWING-18

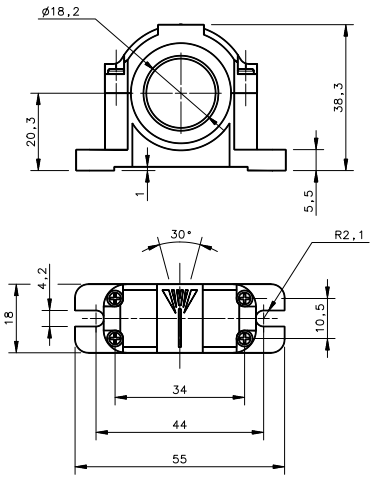

PLASTIC NUT

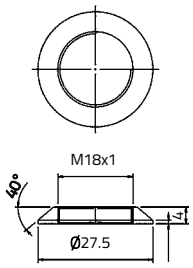

SP-40

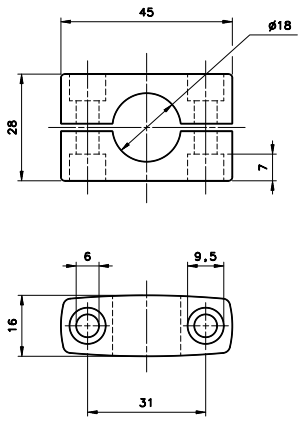

mm

MODEL	DESCRIPTION	ORDER No.
ST-5010	M18/14 mounting bracket	95ACC5230
ST-5011	M18 mounting bracket short	95ACC5240
ST-5012	M18 mounting bracket long	95ACC5250
ST-5017	M18 mounting bracket	95ACC5270
ST1218	M12/M18 mounting brackets	95ACC3340
ST1830	M18/M30 mounting brackets	95ACC3350
SP-40	mounting bracket tubular	95ACC1370
SWING-18	Adjustable support for M18 tubular sensors	895000006
PLASTIC NUT	flared mounting nut	95ACC2630

CABLES

TYPE	DESCRIPTION	LENGTH	MODEL	ORDER No.
Axial M12 Connector	4-pole, grey, P.V.C.	3 m	CS-A1-02-G-03	95A251380
		5 m	CS-A1-02-G-05	95A251270
		7 m	CS-A1-02-G-07	95A251280
		10 m	CS-A1-02-G-10	95A251390
	4-pole, P.U.R.	2 m	CS-A1-02-R-02	95A251540
		5 m	CS-A1-02-R-05	95A251560
Radial M12 Connector	4-pole, grey, P.V.C.	3 m	CS-A2-02-G-03	95A251360
		5 m	CS-A2-02-G-05	95A251240
		7 m	CS-A2-02-G-07	95A251245
		10 m	CS-A2-02-G-10	95A251260
	4-pole, P.U.R.	2 m	CS-A2-02-R-02	95A251550
		5 m	CS-A2-02-R-05	95A251570
Axial M12 Connector	4-pole, shielded, black, P.V.C.	3 m	CV-A1-22-B-03	95ACC1480
		5 m	CV-A1-22-B-05	95ACC1490
		10 m	CV-A1-22-B-10	95ACC1500
		15 m	CV-A1-22-B-15	95ACC2070
		25 m	CV-A1-22-B-25	95ACC2090
Radial M12 Connector		3 m	CV-A2-22-B-03	95ACC1540
		5 m	CV-A2-22-B-05	95ACC1550
		10 m	CV-A2-22-B-10	95ACC1560
Axial M12 Connector	4-pole, U.L., black, P.V.C.	3 m	CS-A1-02-U-03	95ASE1120
		5 m	CS-A1-02-U-05	95ASE1130
		10 m	CS-A1-02-U-10	95ASE1140
		15 m	CS-A1-02-U-15	95ASE1150
		25 m	CS-A1-02-U-25	95ASE1160
	4-pole, black	Connector- not cabled	CS-A1-02-B-NC	G5085002
Radial M12 Connector		Connector- not cabled	CS-A2-02-B-NC	G5085003