DATALOGIC

S5N

The "One For All" smart photoelectric tubular M18 sensors

- All the basic optic functions available
- Improved EMI immunity
- Improved ambient light immunity
- M18 flat plastic with universal mounting
- Available in M18 metal housing
- Axial or radial optics, cable or connector
- Standard 4-wire NO-NC NPN or PNP output

SENSORS

APPLICATIONS

-Processing and Packaging machinery
-Conveyor lines, material handling
-Ceramics intralogistics
-Automated warehousing

(*) Axial models.
ATEX II 3DG

S50/S51		
Through beam		0...20 m
Polarized retroreflective (on R2 reflector)		0,1...4 m
Retroreflective for transparent (on R2 reflector)		0,1...1,3 m
Diffuse proximity		medium distance 0...400 mm long distance 0...700 mm
Power supply	Vdc	10...30 V
	Vac	
	Vac/dc	
Output	PNP	▪
	NPN	▪
	NPN/PNP	
	relay	
	other	
Connection	cable	▪
	connector	▪
	pig-tail	
Approximate dimensions (mm)		M18x 55/68
Housing material		PBT, nickel plated brass
Mechanical protection		IP67

TECHNICAL DATA	
Power supply	10 ... 30 Vdc (limit values)
Ripple	2 Vpp max.
Consumption (output current excluded)	35 mA max. (mod. S5N...B01/C01/C21/E01/T01) 30 mA max. (mod. S5N...F01)
Light emission	red LED 630 nm (mod. S5N...E01) red LED 660 nm (mod. S5N...B01/T01) IR LED 880 nm (mod. S5N...C01/C21/G00)
Setting	sensivity trimmer (mod. B01/C01/C21/E01/F01/T01)
Operating mode	LIGHT mode on N.O. output / DARK mode on N.C. output (mod.S5N...C01/C21) DARK mode on N.O. output / LIGHT mode on N.C. output (mod.S5N...B01/E01/F01/T01)
Indicators	yellow OUTPUT LED green STABILITY LED (mod. S5N...B01/C01/C21/E01/F01), POWER LED (mod. S5N...G00)
Output	PNP or NPN; NO; NC (mod. S5N)
Output current	100 mA max.
Saturation voltage	2 V max.
Response time	0,5 ms (mod. S5N...B01/T01/C21/C01/E01) 2 ms (mod. S5N...F01/G00)
Switching frequency	1 kHz (mod. S5N...B01/T01/C21/C01/E01) 250 Hz (mod. S5N...F01/G00)
Connection	2 m cable Ø 4 mm, M12 4-pole connector
Dielectric strength	500 Vac, 1 min between electronics and housing
Insulating resistance	>20 MΩ, 500 Vdc between electronics and housing
Electrical protection	class 2
Mechanical protection	IP67
Ambient light rejection	according to EN 60947-5-2
Vibrations	0,5 mm amplitude, 10 ... 55 Hz frequency, for every axis (EN60068-2-6)
Shock resistance	11 ms (30 G) 6 shock for every axis (EN60068-2-27)
Housing material	Plastic version PBT Metal version nickel plated brass
Lens material	PMMA
Operating temperature	-25 ... 55 °C
Storage temperature	-25 ... 70 °C
Weight	Plastic version 75 g max. cable vers., 25 g max. conn. vers. Metal version 110 g max. cable vers., 60 g max. conn. vers.

S5N

DIMENSIONS

PLASTIC

AXIAL VERSION

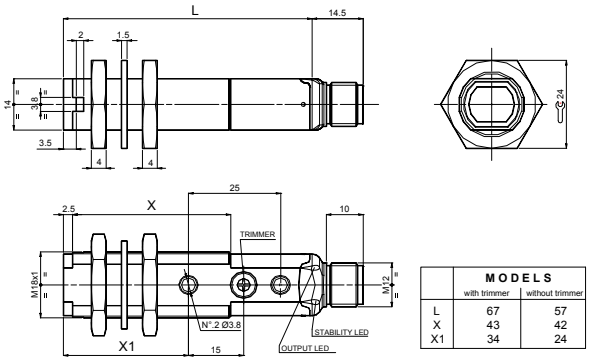

	MODELS	
	with trimmer	without trimmer
L	67	57
X	43	42
X1	34	24

RADIAL VERSION

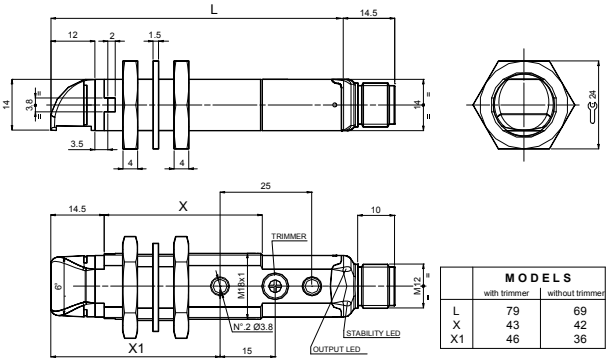

	MODELS	
	with trimmer	without trimmer
L	79	69
X	43	42
X1	46	36

FIBRE OPTIC VERSION

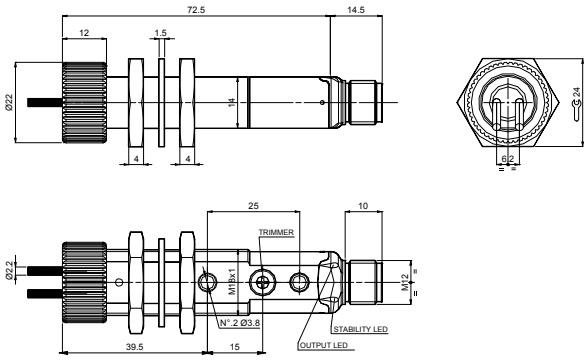

METAL

AXIAL VERSION

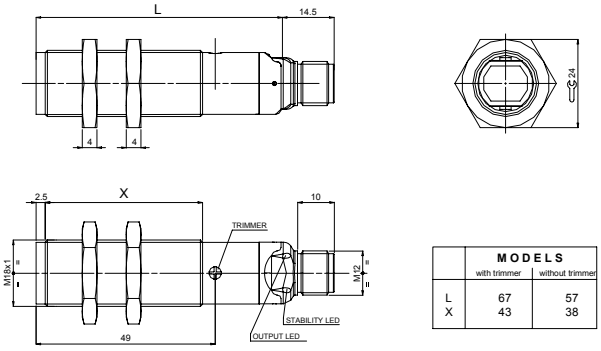

	MODELS	
	with trimmer	without trimmer
L	67	57
X	43	38

RADIAL VERSION

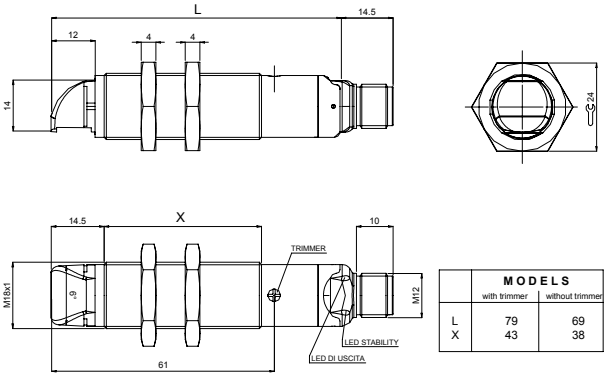

	MODELS	
	with trimmer	without trimmer
L	79	69
X	43	38

FIBRE OPTIC VERSION

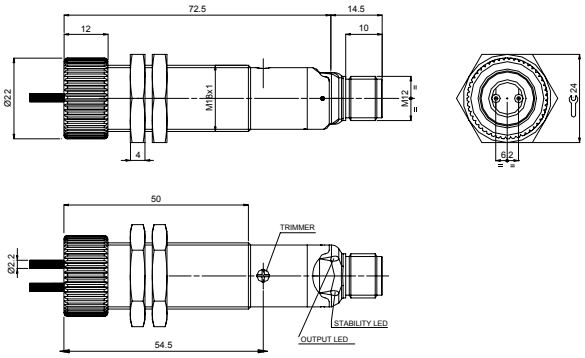

CONNECTIONS

CABLE

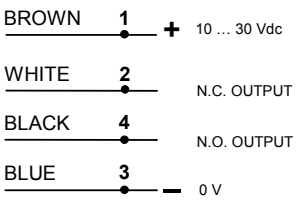

Through beam emitter

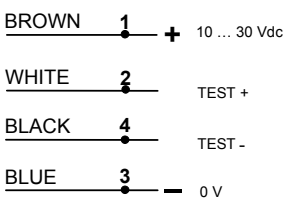

M12 CONNECTOR

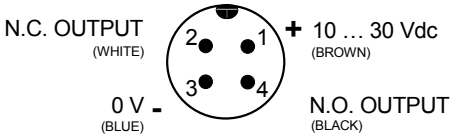

S5N

INDICATORS AND SETTINGS

S5N-XX...B01/C01/C21/E01/F01/T01

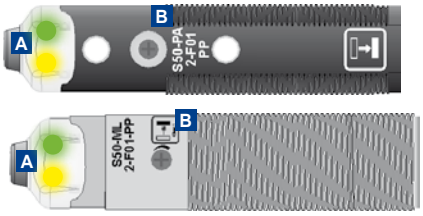

A OUTPUT status LED Yellow
STABILITY LED Green (Only Receiver)
POWER ON LED Green (Only Emitter)

B Adjustment trimmer (receiver)

Single-turn trimmer for sensitivity adjustment. Rotate in a clockwise direction to increase the operating distance.

S5N DETECTION DIAGRAMS

G/F INFRARED EMISSION

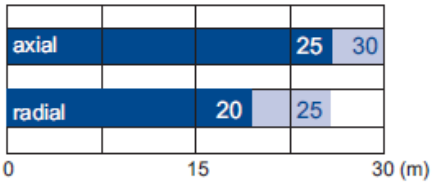

Recommended operating distance
Maximum operating distance

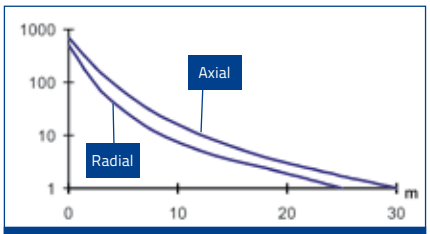

Excess gain

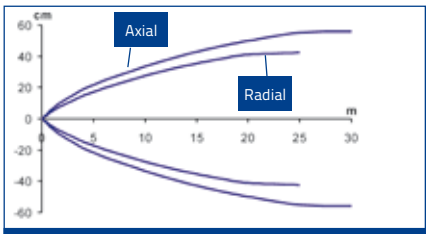

Detection area

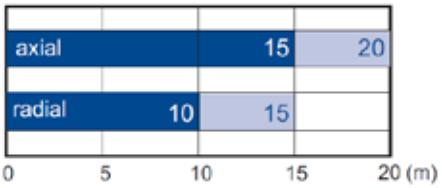

Recommended operating distance
Maximum operating distance

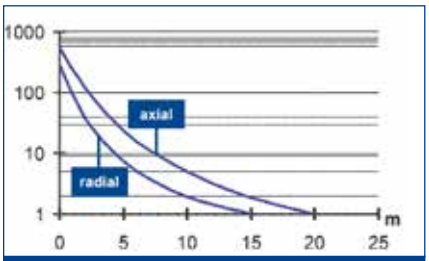

Excess gain

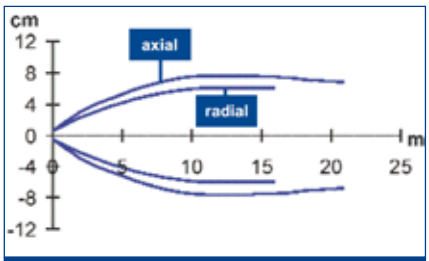

Detection area

B RED EMISSION

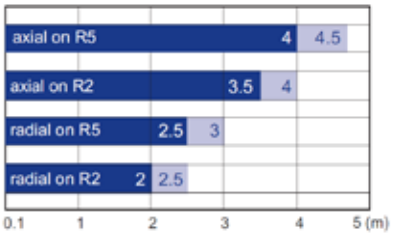

Recommended operating distance
Maximum operating distance

High efficiency reflectors can be used to obtain larger operating distances.
Refer to **Reflectors**.

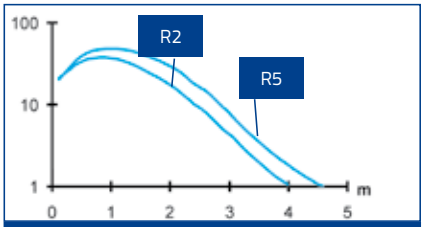

Excess gain - axial

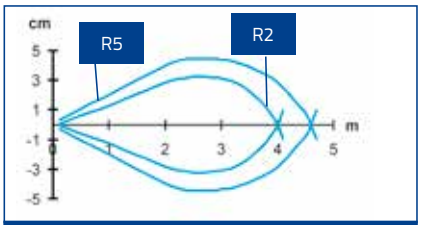

Detection area - axial

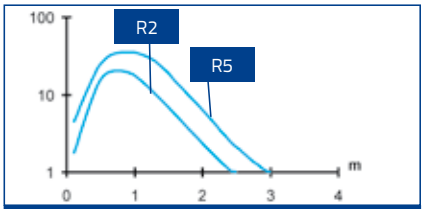

Excess gain - radial

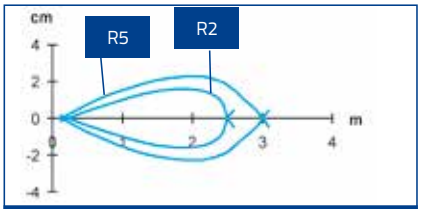

Detection area - radial

T RED EMISSION

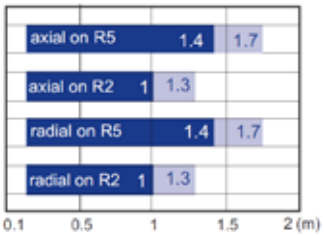

Recommended operating distance
Maximum operating distance

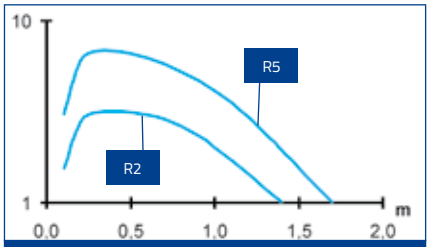

Excess gain

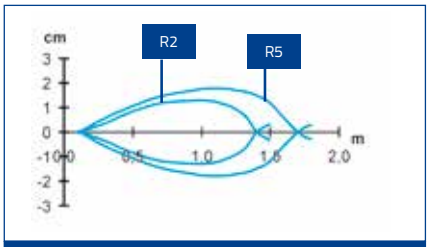

Detection area

High efficiency reflectors can be used to obtain larger operating distances. Refer to **Reflectors**.

Tubular Sensors – S5N

DATALOGIC

C MID INFRARED EMISSION

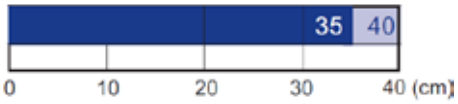

Recommended operating distance
Maximum operating distance

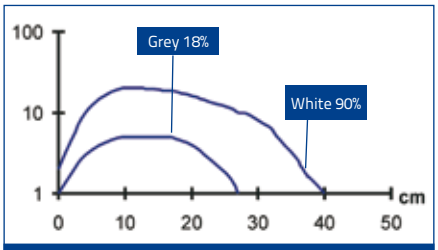

Excess gain

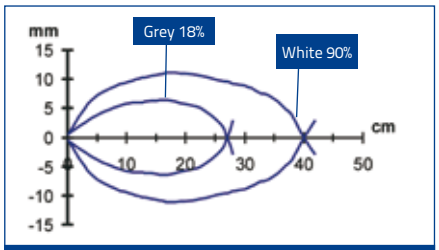

Detection area

C LONG INFRARED EMISSION

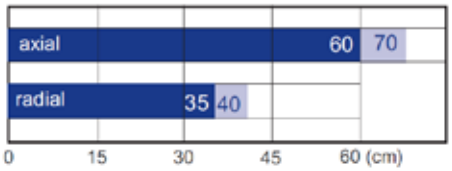

Recommended operating distance
Maximum operating distance

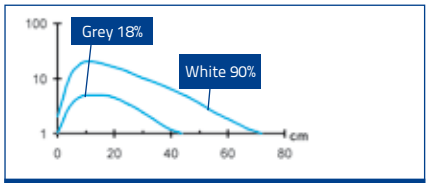

Excess gain - axial

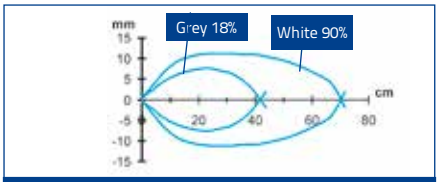

Detection area - axial

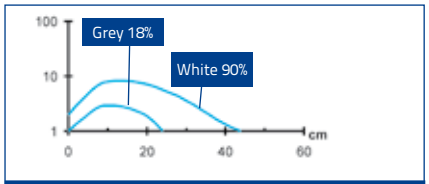

Excess gain - radial

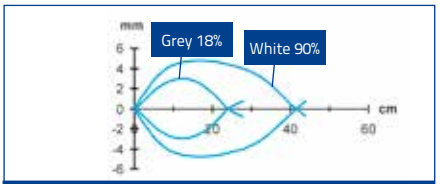

Detection area - radial

E RED EMISSION

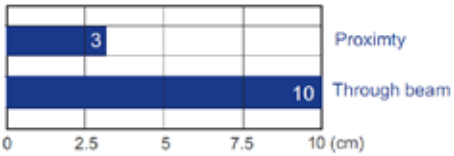

Operating distance with standard fibers

Standard Fiber-optics:
OF-42-ST-20 proximity
OF-43-ST-20 through beam

High efficiency fiber-optics or accessory lenses can be used to obtain larger operating distances.

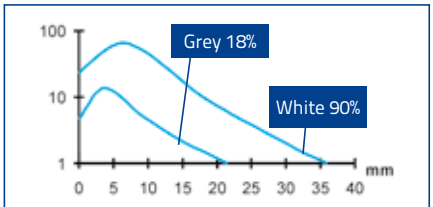

Excess gain - proximity *

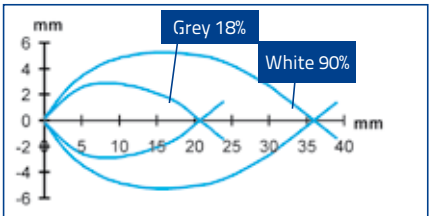

Detection area - proximity *

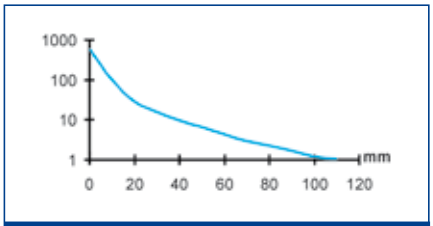

Excess gain - through beam *

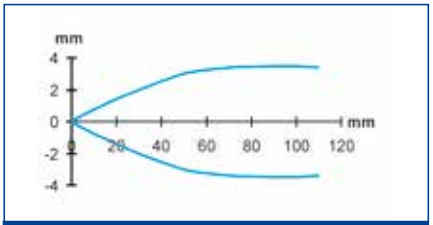

Detection area - through beam *

* standard Fiber-optics

MODEL SELECTION AND ORDER INFORMATION

S5N PLASTIC MODELS					
OPTIC FUNCTION	EMISSION	CONNECTION	OUTPUT	MODEL	ORDER No.
Polarized retroreflective	LED, Axial optic	2m Cable	NPN	S5N-PA-2-B01-NN	952001611
			PNP	S5N-PA-2-B01-PP	952001011
		M12 Connector	NPN	S5N-PA-5-B01-NN	952001501
			PNP	S5N-PA-5-B01-PP	952001021
	LED, Radial optic	2m Cable	NPN	S5N-PR-2-B01-NN	952001781
			PNP	S5N-PR-2-B01-PP	952001031
		M12 Connector	NPN	S5N-PR-5-B01-NN	952001721
			PNP	S5N-PR-5-B01-PP	952001041
Long Diffuse proximity	LED, Axial optic	2m Cable	NPN	S5N-PA-2-C01-NN	952001621
			PNP	S5N-PA-2-C01-PP	952001051
		M12 Connector	NPN	S5N-PA-5-C01-NN	952001511
			PNP	S5N-PA-5-C01-PP	952001061
	LED, Radial optic	2m Cable	NPN	S5N-PR-2-C01-NN	952001791
			PNP	S5N-PR-2-C01-PP	952001071
		M12 Connector	NPN	S5N-PR-5-C01-NN	952001731
			PNP	S5N-PR-5-C01-PP	952001081
Medium Diffuse proximity	LED, Axial optic	2m Cable	NPN	S5N-PA-2-C21-NN	952002171
			PNP	S5N-PA-2-C21-PP	952002161
		M12 Connector	NPN	S5N-PA-5-C21-NN	952002191
			PNP	S5N-PA-5-C21-PP	952002181
Fiber optic	LED, Axial optic	2m Cable	NPN	S5N-PA-2-E01-NN	952001651
			PNP	S5N-PA-2-E01-PP	952001131
		M12 Connector	NPN	S5N-PA-5-E01-NN	952001541
			PNP	S5N-PA-5-E01-PP	952001141
Through beam receiver	LED, Axial optic	2m Cable	NPN	S5N-PA-2-F01-NN	952001661
			PNP	S5N-PA-2-F01-PP	952001151
		M12 Connector	NPN	S5N-PA-5-F01-NN	952001551
			PNP	S5N-PA-5-F01-PP	952001161
	LED, Radial optic	2m Cable	NPN	S5N-PR-2-F01-NN	952001821
			PNP	S5N-PR-2-F01-PP	952001171
		M12 Connector	NPN	S5N-PR-5-F01-NN	952001761
			PNP	S5N-PR-5-F01-PP	952001181
Through beam emitter	LED, Axial optic	2m Cable	-	S5N-PA-2-G00-XG	952001191
		M12 Connector	-	S5N-PA-5-G00-XG	952001201
	LED, Radial optic	2m Cable	-	S5N-PR-2-G00-XG	952001211
		M12 Connector	-	S5N-PR-5-G00-XG	952001221
Retroreflective for transparent	LED, Axial optic	2m Cable	NPN	S5N-PA-2-T01-NN	952001691
			PNP	S5N-PA-2-T01-PP	952001261
		M12 Connector	NPN	S5N-PA-5-T01-NN	952001581
			PNP	S5N-PA-5-T01-PP	952001271
	LED, Radial optic	2m Cable	NPN	S5N-PR-2-T01-NN	952001831
			PNP	S5N-PR-2-T01-PP	952001281
		M12 Connector	NPN	S5N-PR-5-T01-NN	952001771
			PNP	S5N-PR-5-T01-PP	952001291

DATALOGIC

S5N METAL MODELS					
OPTIC FUNCTION	EMISSION	CONNECTION	OUTPUT	MODEL	ORDER No.
Polarized retroreflective	LED, Axial optic	2m Cable	NPN	S5N-MA-2-B01-NN	952021501
			PNP	S5N-MA-2-B01-PP	952021001
		M12 Connector	NPN	S5N-MA-5-B01-NN	952021661
			PNP	S5N-MA-5-B01-PP	952021201
	LED, Radial optic	2m Cable	NPN	S5N-MR-2-B01-NN	952021601
			PNP	S5N-MR-2-B01-PP	952021141
		M12 Connector	NPN	S5N-MR-5-B01-NN	952021761
			PNP	S5N-MR-5-B01-PP	952021341
Long Diffuse proximity	LED, Axial optic	2m Cable	NPN	S5N-MA-2-C01-NN	952021511
			PNP	S5N-MA-2-C01-PP	952021011
		M12 Connector	NPN	S5N-MA-5-C01-NN	952021671
			PNP	S5N-MA-5-C01-PP	952021211
	LED, Radial optic	2m Cable	NPN	S5N-MR-2-C01-NN	952021611
			PNP	S5N-MR-2-C01-PP	952021151
		M12 Connector	NPN	S5N-MR-5-C01-NN	952021771
			PNP	S5N-MR-5-C01-PP	952021351
Medium Diffuse proximity	LED, Axial optic	2m Cable	NPN	S5N-MA-2-C21-NN	952022131
			PNP	S5N-MA-2-C21-PP	952022121
		M12 Connector	NPN	S5N-MA-5-C21-NN	952022151
			PNP	S5N-MA-5-C21-PP	952022141
Fiber optic	LED, Axial optic	2m Cable	NPN	S5N-MA-2-E01-NN	952021881
			PNP	S5N-MA-2-E01-PP	952021041
		M12 Connector	NPN	S5N-MA-5-E01-NN	952021891
			PNP	S5N-MA-5-E01-PP	952021241
Through beam receiver	LED, Axial optic	2m Cable	NPN	S5N-MA-2-F01-NN	952021541
			PNP	S5N-MA-2-F01-PP	952021051
		M12 Connector	NPN	S5N-MA-5-F01-NN	952021701
			PNP	S5N-MA-5-F01-PP	952021251
	LED, Radial optic	2m Cable	NPN	S5N-MR-2-F01-NN	952021641
			PNP	S5N-MR-2-F01-PP	952021171
		M12 Connector	NPN	S5N-MR-5-F01-NN	952021801
			PNP	S5N-MR-5-F01-PP	952021371
Through beam emitter	LED, Axial optic	2m Cable	-	S5N-MA-2-G00-XG	952021061
		M12 Connector	-	S5N-MA-5-G00-XG	952021261
	LED, Radial optic	2m Cable	-	S5N-MR-2-G00-XG	952021181
		M12 Connector	-	S5N-MR-5-G00-XG	952021381
Retroreflective for transparent	LED, Axial optic	2m Cable	NPN	S5N-MA-2-T01-NN	952021571
			PNP	S5N-MA-2-T01-PP	952021091
		M12 Connector	NPN	S5N-MA-5-T01-NN	952021731
			PNP	S5N-MA-5-T01-PP	952021291
	LED, Radial optic	2m Cable	NPN	S5N-MR-2-T01-NN	952021651
			PNP	S5N-MR-2-T01-PP	952021191
		M12 Connector	NPN	S5N-MR-5-T01-NN	952021811
			PNP	S5N-MR-5-T01-PP	952021391

ACCESSORIES

MODEL	DESCRIPTION	ORDER No.
ST-5010	M18/14 mounting bracket	95ACC5230
ST-5011	M18 mounting bracket short	95ACC5240
ST-5012	M18 mounting bracket long	95ACC5250
ST-5017	M18 mounting bracket	95ACC5270
S50 EASY -IN	M18/14 EASY in™ adjustable mounting support	95ACC 5300
JOINT -18	M18 jointed support	95ACC 5220
MICRO -18	support with micrometric regulation for tubular M18 sensors	95ACC 1380
ST1218	M12/M18 mounting brackets	95ACC3340
ST1830	M18/M30 mounting brackets	95ACC3350
SP-40	mounting bracket tubular	95ACC1370
SWING-18	adjustable support for M18 tubular sensors	895000006
PLASTIC NUT	flared mounting nut	95ACC2630
MEK -PROOF	front protection (only for metal models)	G5000001

CABLES

TYPE	DESCRIPTION	LENGTH	MODEL	ORDER No.
Axial M12 Connector	4-pole, grey, P.V.C.	3 m	CS-A1-02-G-03	95A251380
		5 m	CS-A1-02-G-05	95A251270
		7 m	CS-A1-02-G-07	95A251280
		10 m	CS-A1-02-G-10	95A251390
	4-pole, P.U.R.	2 m	CS-A1-02-R-02	95A251540
		5 m	CS-A1-02-R-05	95A251560
Radial M12 Connector	4-pole, grey, P.V.C.	3 m	CS-A2-02-G-03	95A251360
		5 m	CS-A2-02-G-05	95A251240
		7 m	CS-A2-02-G-07	95A251245
		10 m	CS-A2-02-G-10	95A251260
	4-pole, P.U.R.	2 m	CS-A2-02-R-02	95A251550
		5 m	CS-A2-02-R-05	95A251570
Radial M12 Connector with LED (for PNP N.O. sensors)	4-pole, grey, P.V.C.	3 m	CS-A2-12-G-03	95A251400
		5 m	CS-A2-12-G-05	95A251350
		10 m	CS-A2-12-G-10	95A251370
Axial M12 Connector	4-pole, shielded, black, P.V.C.	3 m	CV-A1-22-B-03	95ACC1480
		5 m	CV-A1-22-B-05	95ACC1490
		10 m	CV-A1-22-B-10	95ACC1500
		15 m	CV-A1-22-B-15	95ACC2070
		25 m	CV-A1-22-B-25	95ACC2090
Radial M12 Connector		3 m	CV-A2-22-B-03	95ACC1540
		5 m	CV-A2-22-B-05	95ACC1550
		10 m	CV-A2-22-B-10	95ACC1560
Axial M12 Connector	4-pole, U.L., black, P.V.C.	3 m	CS-A1-02-U-03	95ASE1120
		5 m	CS-A1-02-U-05	95ASE1130
		10 m	CS-A1-02-U-10	95ASE1140
		15 m	CS-A1-02-U-15	95ASE1150
		25 m	CS-A1-02-U-25	95ASE1160
	4-pole, black	Connector- not cabled	CS-A1-02-B-NC	G5085002
Radial M12 Connector		Connector- not cabled	CS-A2-02-B-NC	G5085003

S5N

ACCESSORIES

ST-5010

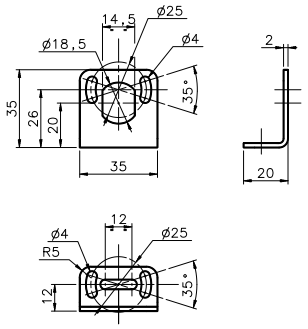

ST-5011

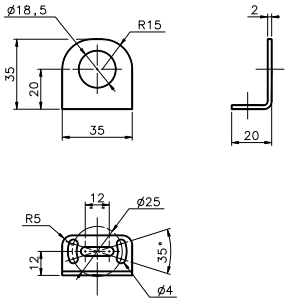

ST-5012

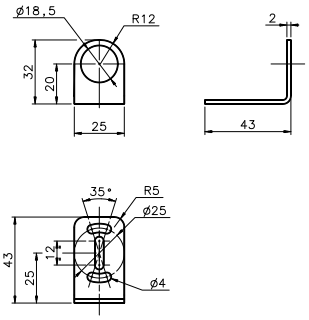

ST-5017

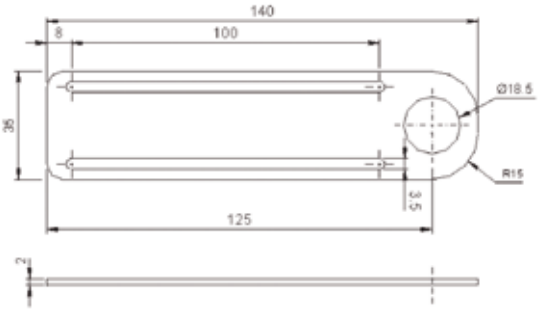

SWING-18

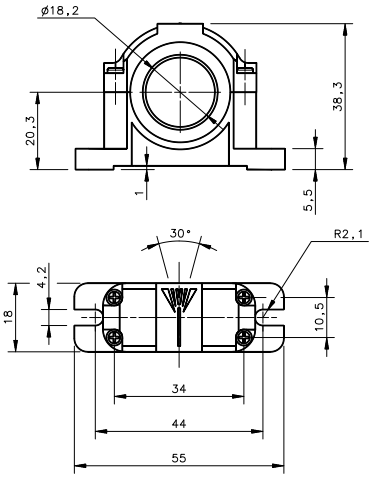

PLASTIC NUT

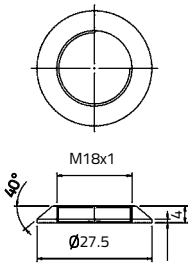

SP-40

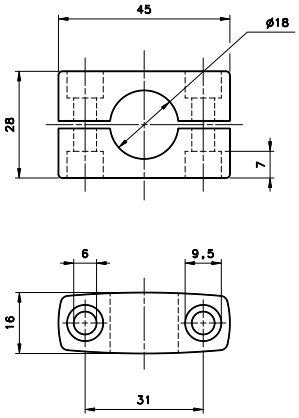

JOINT 18

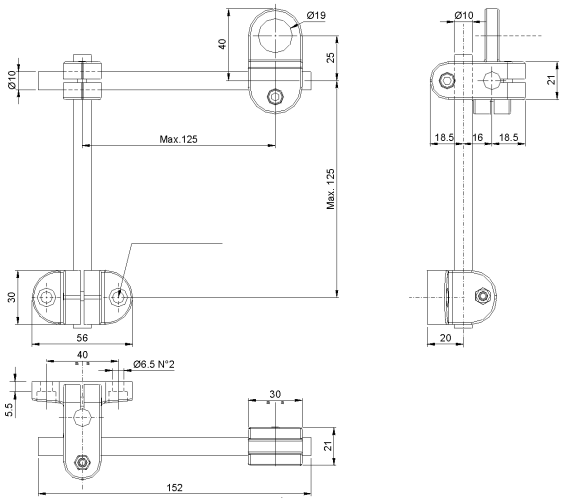

MICRO 18

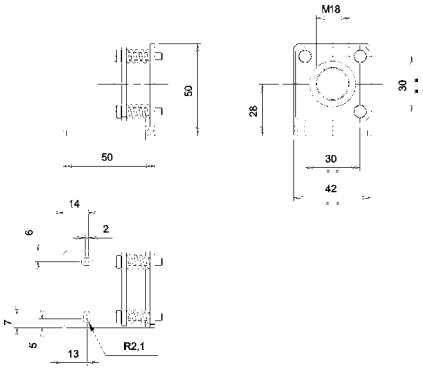

mm